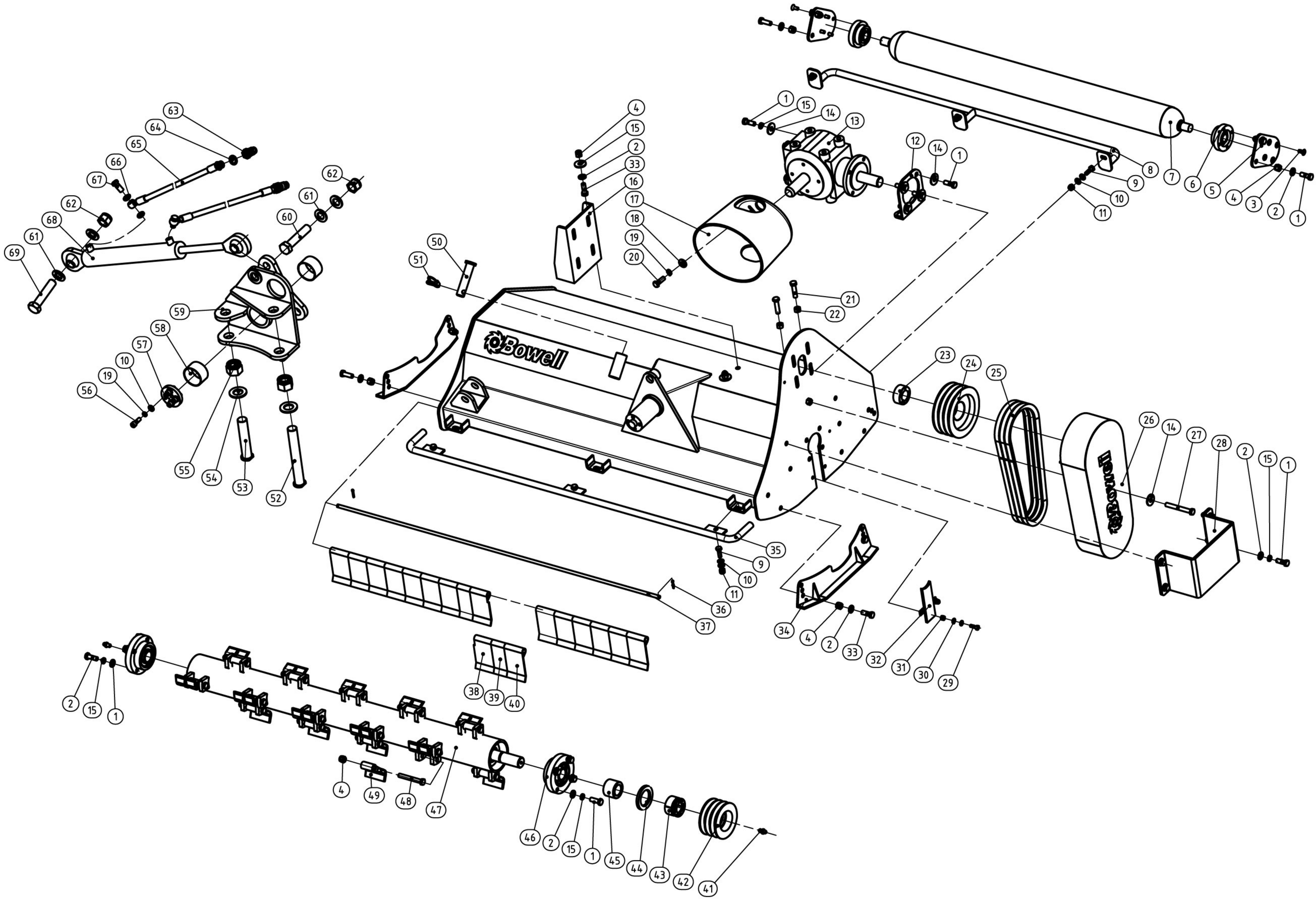
Bowell
Bowell